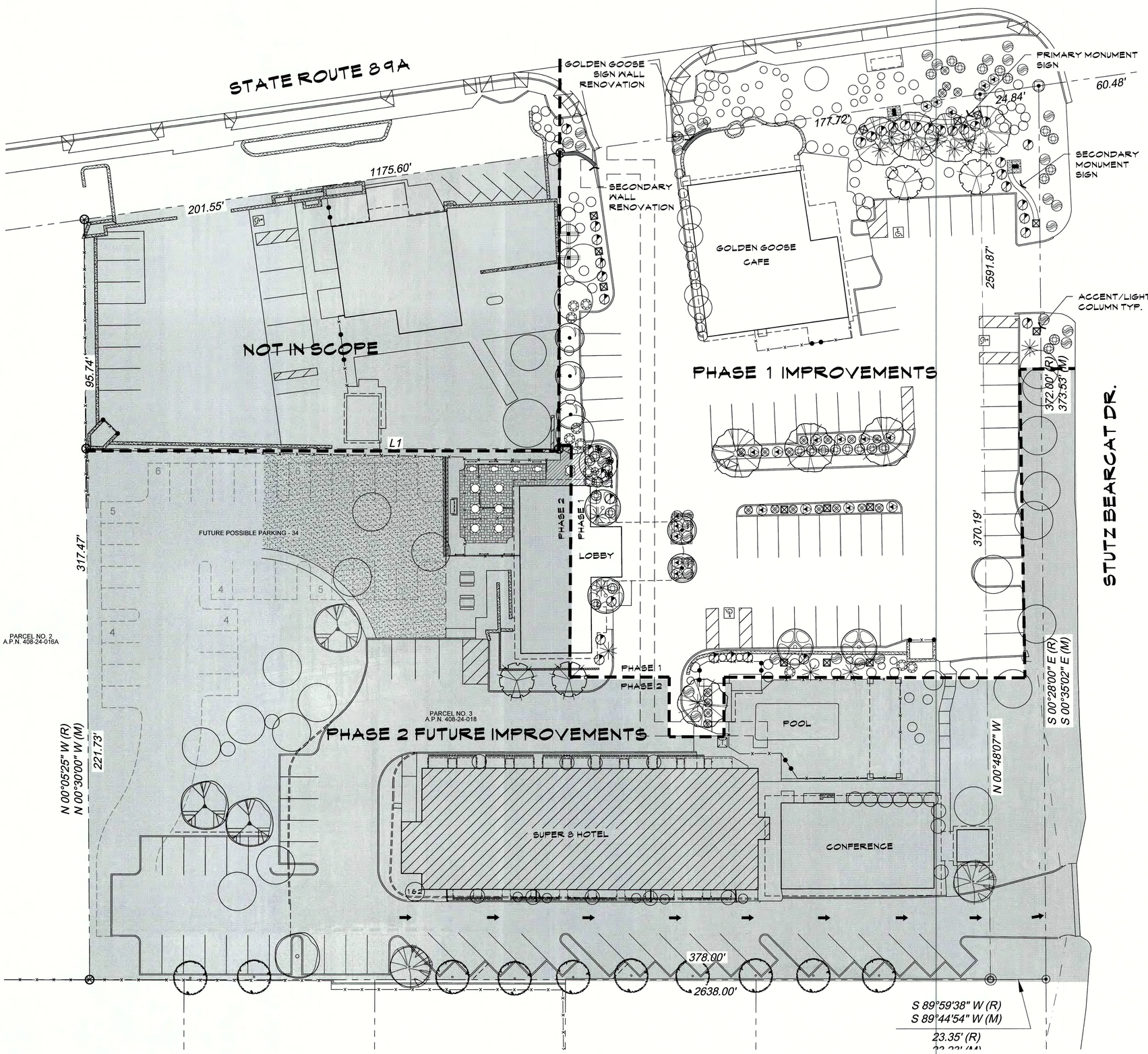

SYMBOL	BOTANICAL NAME - COMMON NAME
TREES	
	QUERCUS VIRGINIANA - SOUTHERN LIVE OAK
	PYRUS CALLERYANA - BRADFORD PEAR
	LAGERSTROEMIA INDICA - CRAPE MYRTLE
	PRUNUS CERASIFERA 'ATROPUPUREA' - PURPLE LEAF PLUM
SHRUBS	
	BERBERIS VULGARIS - BARBERRY
	NANDINA DOMESTICA - HEAVENLY BAMBOO
	PEROVSKIA ATRIPLICIFOLIA - RUSSIAN SAGE
	PHOTINIA X FRASERI - PHOTINIA
ACCENTS	
	AGAVE PARRYI - PARRY'S AGAVE
	DASYLIRION ACROTRICHUM - GREEN DESERT SPOON
	HESPERALOE PARVIFLORA - RED YUCCA
	NOLINA MICROPCARPA - BEAR GRASS
	OPUNTIA PHAEACANTHA - DESERT PRICKLY PEAR
GROUND COVERS	
	CHRYSACTINIA MEXICANA - DAMIANITA DAISY
SALVAGE MATERIAL	
	SALVAGED PLANT TO REMAIN IN PLACE
	DECOMPOSED GRANITE - T.B.D.

SPECIAL IRRIGATION NOTE:
RETROFIT EXISTING IRRIGATION SYSTEM IN THE FIELD FOR NEW PLANTING

NOTE: FOR FUTURE PHASE 2 IMPROVEMENTS REFER TO MASTER PLAN

SCALE: 1"=20'-0"

0' 10' 20' 40' 60'

NORTH

The McGough Group
Landscape Architecture
Urban Design · Site Imaging
Parks and Recreation
11110 N Tatum Blvd.
Suite 100
Phoenix, Arizona
85028
602-997-9093
602-997-9031 fax
E-Mail: Timm@mg-az.com

Registered Landscape Architect
CERTIFICATE NO. 27932
TIMOTHY J. MCGOUGH
06-20-2018
Expires: 6-30-2018

PLANTING PLAN
ANDANTE INN - SEDONA
2545 STATE ROUTE 89A
SEDONA, ARIZONA

These drawings, as legal instruments of professional services are, and shall remain the property of the landscape architect.

These drawings shall not be used on other projects or for additions to this project except by written agreement from the landscape architect.

JOB NO. 16-31
DATE: 06-20-16
DRAWN BY: KC, CS
CHECKED BY: TM

REVISIONS:

SHEET NO.
L4.1

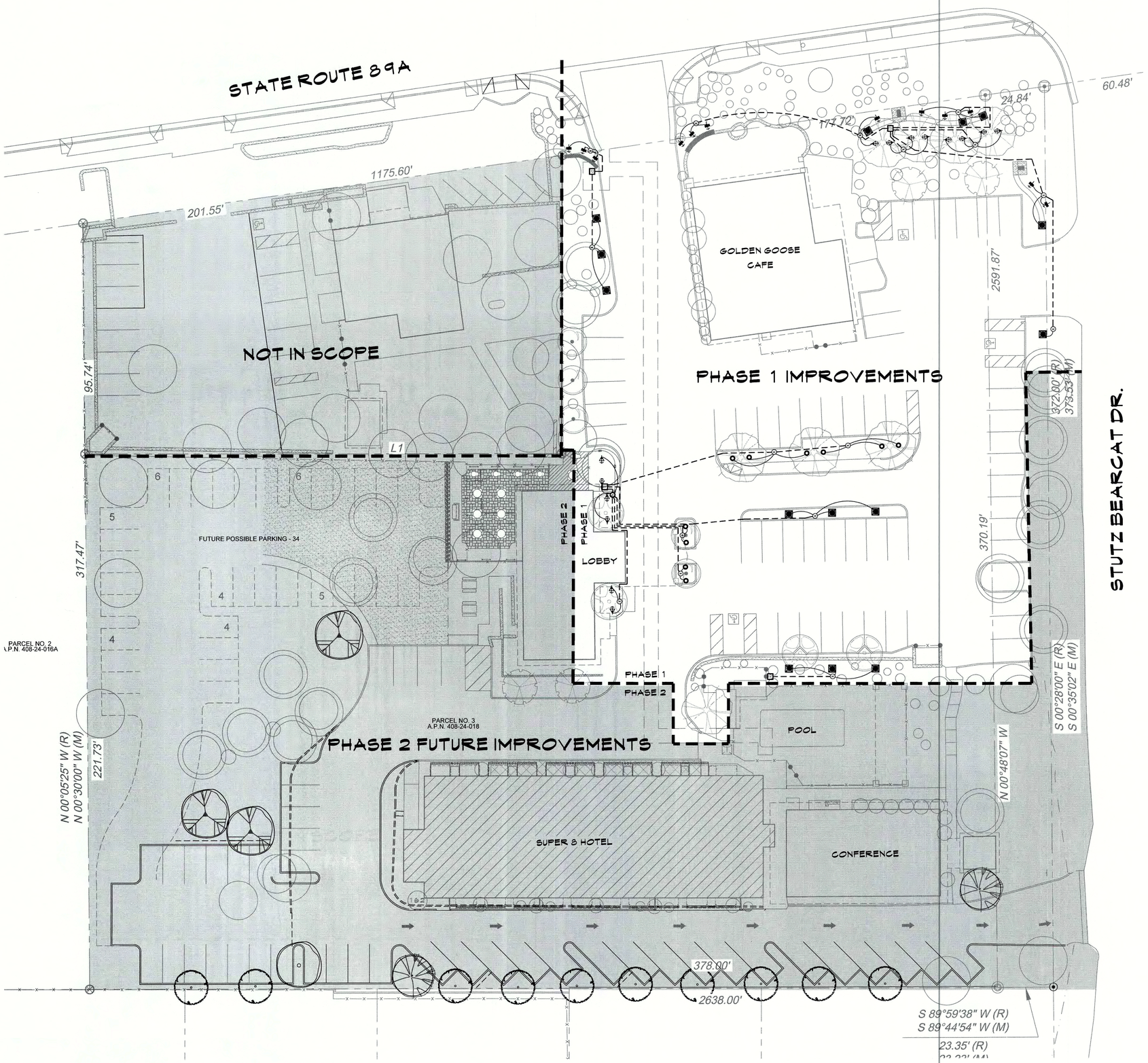

LIGHTING LEGEND

SYMBOL	DESCRIPTION	QTY
DIRECTIONAL UPLIGHT		
	UNIQUE, PULSAR = PULS-12-L527 *CAST BRASS, GLARE CONTROL LENS KIT, PVC MOUNTING STAKE, 25' WIRE LEAD, FLEX SERIES 5 WATT LED*	14
WALL WASHER		
	UNIQUE, STELLAR = STEL-12-L2 *CAST BRASS, GLARE CONTROL LENS KIT, PVC MOUNTING STAKE, 25' WIRE LEAD, FLEX SERIES 2 WATT LED*	12
COLUMN UPLIGHT		
	UNIQUE, LED-18W-PWF27K-12 *INSTALL INSIDE COLUMN USING STAINLESS STEEL GIMBLE RING MODEL # 2040426*	15
WELL LIGHTS		
	UNIQUE, APOLLOSTAR = APST-12-L727 *TERRATHERMA PLASTIC HOUSING, COMMERCIAL BRASS GRATE, GLARE CONTROL LENS KIT, FLEX SERIES 7 WATT LED*	10
TRANSFORMERS & HUBS		
	UNIQUE, INTELLI-MATIC TRANSFORMER, *SINGLE CORE, MULTI TAP, 12 VOLT TRANSFORMER, STAINLESS STEEL HOUSING WITH LIGHT LOGIC (LPCU)*	4
	UNIQUE, INTELLI-HUB	1
	UNIQUE, SATELLITE HUB	16

PULSAR

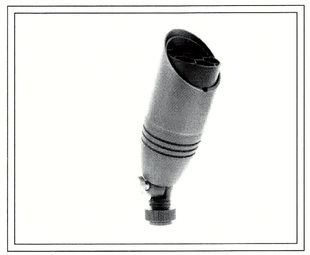

STELLAR

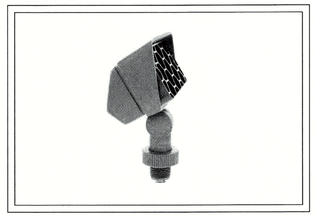

APOLLO STAR

NOTE: FOR FUTURE PHASE 2 IMPROVEMENTS REFER TO MASTER PLAN

SCALE: 1"=20'-0"

0' 10' 20' 40' 60'

NORTH

The McGough Group

Landscape Architecture
Urban Design · Site Imaging
Parks and Recreation

11110 N Tatum Blvd.
Suite 100
Phoenix, Arizona
85028

602-997-9093
602-997-9031 fax
E-Mail: Timm@mg-az.com

Registered Landscape Architect
Certificate No. 27932
TIMOTHY J. MCGOUGH
Date Signed 6-20-16
Expires: 6-30-2018

LIGHTING PLAN
ANDANTE INN - SEDONA
2545 STATE ROUTE 89A
SEDONA, ARIZONA

These drawings, as legal instruments of professional services are, and shall remain the property of the landscape architect.

These drawings shall not be used on other projects or for additions to this project except by written agreement from the landscape architect.

JOB NO. 16-31
DATE: 06-20-16
DRAWN BY: KC, CS
CHECKED BY: TM

REVISIONS:

SHEET NO.
L5.1

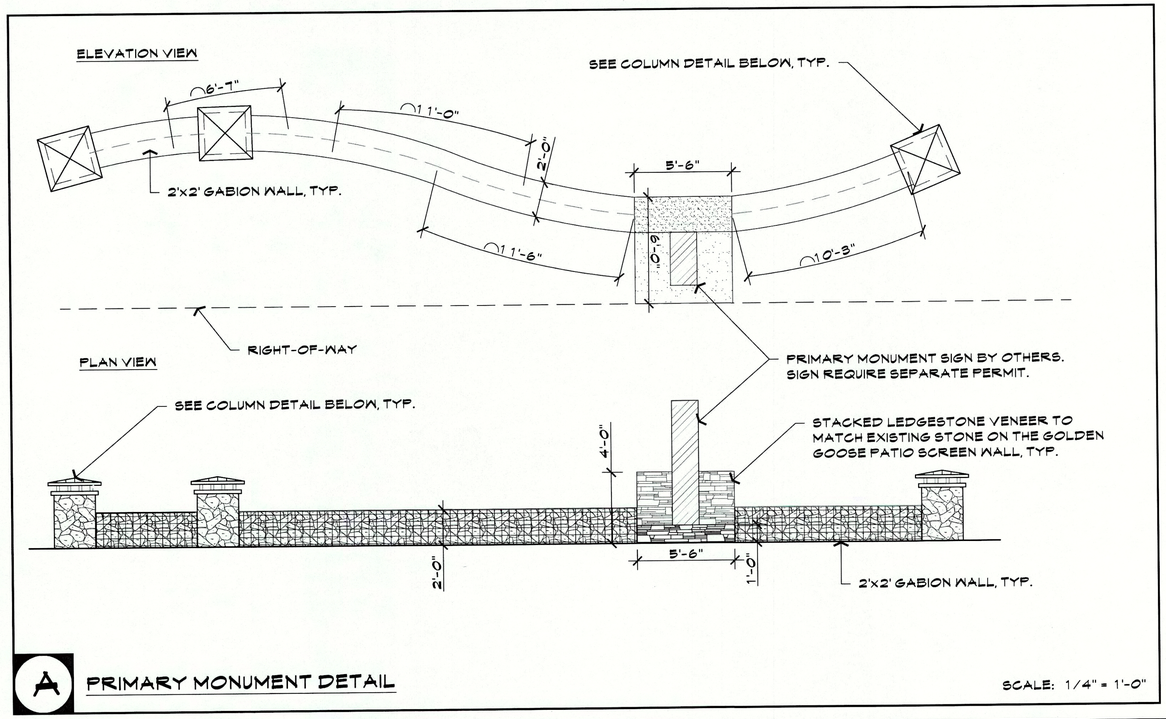

A PRIMARY MONUMENT DETAIL

SCALE: 1/4" = 1'-0"

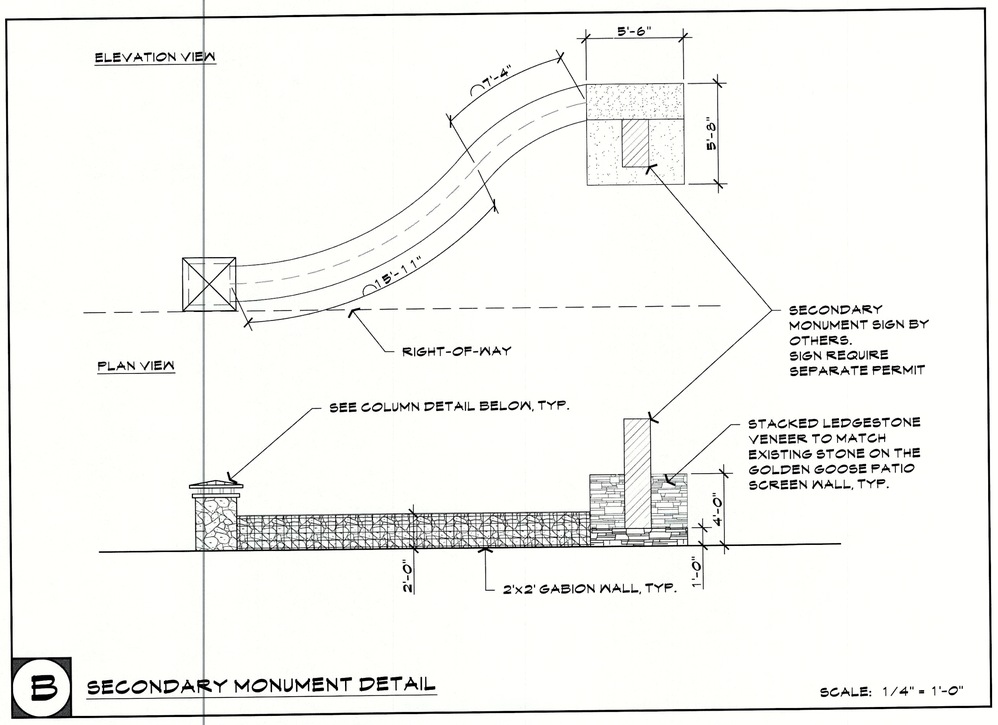

B SECONDARY MONUMENT DETAIL

SCALE: 1/4" = 1'-0"

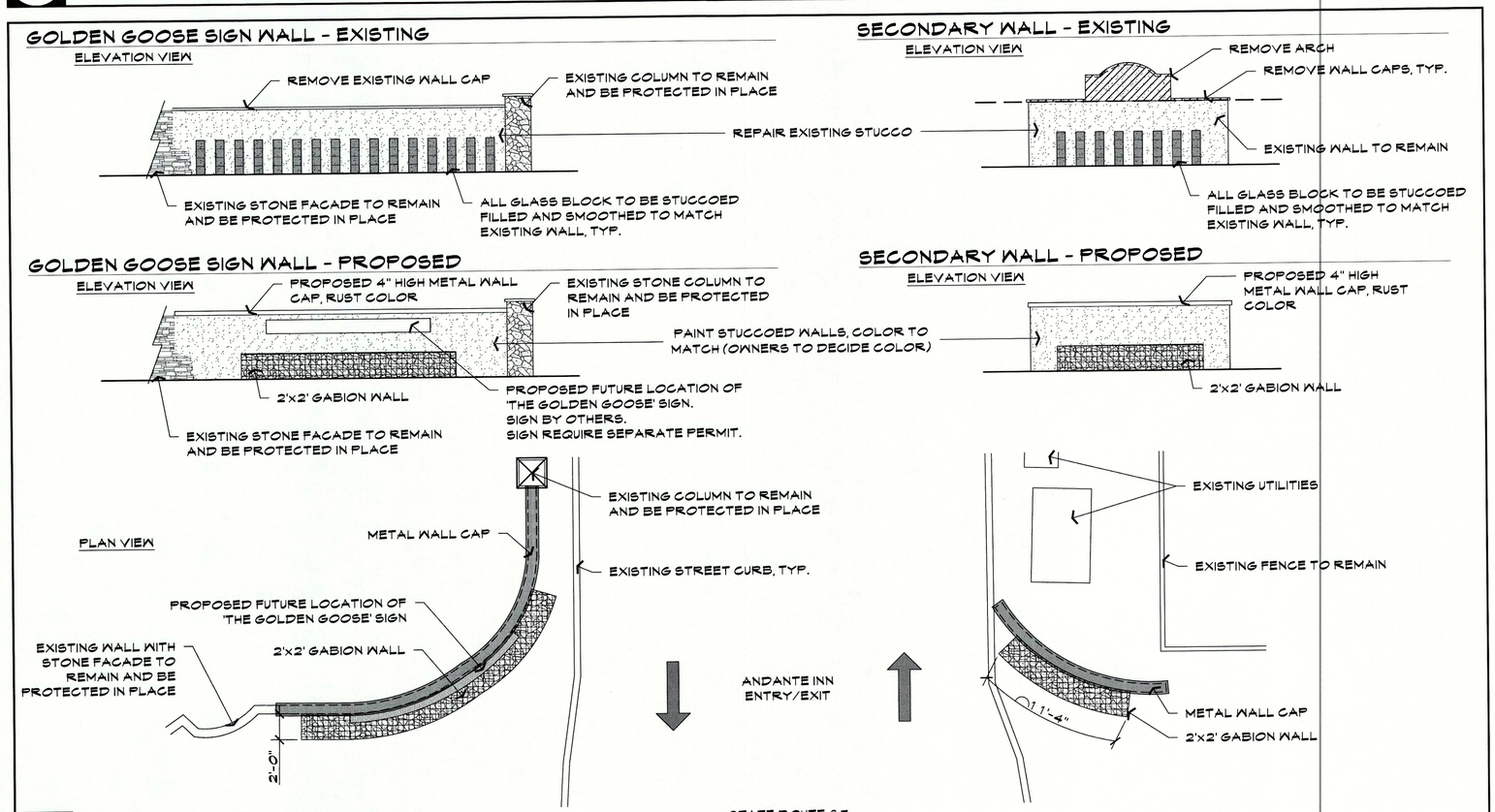

C GOLDEN GOOSE SIGN & ENTRY RENOVATION DETAIL

SCALE: 3/16" = 1'-0"

CONSTRUCTION NOTES

1. ALL PROPOSED STONE FACADE IS TO MATCH THE EXISTING STONE FACADE ON THE GOLDEN GOOSE.
2. ROCK FOR THE GABION SHALL BE NATIVE SEDONA RED ROCK, 3"-6" RIP RAP.
3. ALL METAL SHALL BE ELECTROSTATICALLY PAINTED. RUST COLOR IS BY CARDINAL PAINTS, T091-BR47.
4. MONUMENT SIGN IS BY SIGNARAMA. CONTACT: MARK PETERSON 928-714-0740.

The McGough Group

Landscape Architecture
Urban Design - Site Imaging
Parks and Recreation

11110 N Tatum Blvd.
Suite 100
Phoenix, Arizona
85028

602-997-9093
602-997-9031 fax
E-Mail: Timm@mg-az.com

Registered Landscape Architect
CERTIFICATE NO. 27932
TIMOTHY A. MCGOUGH
06-20-2016
Signature
Expires: 6-30-2018

HARDSCAPE DETAILS
ANDANTE INN - SEDONA
2545 STATE ROUTE 89A
SEDONA, ARIZONA

These drawings, as legal instruments of professional services are, and shall remain the property of the landscape architect.

These drawings shall not be used on other projects or for additions to this project except by written agreement from the landscape architect.

JOB NO. 16-31
DATE: 06-20-16
DRAWN BY: KC, CS
CHECKED BY: TM

REVISIONS:

SHEET NO.
L6.1

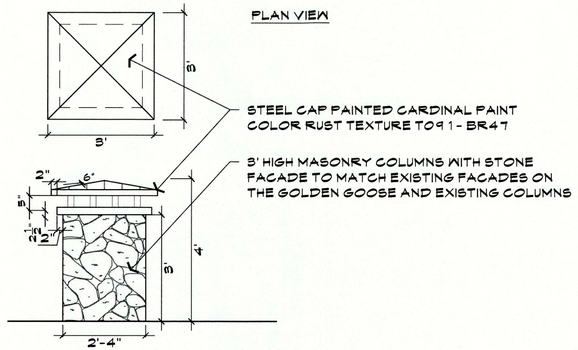

*THERE ARE A TOTAL OF (14) COLUMNS WHICH INCLUDES THE COLUMNS LOCATED WITHIN THE ENTRY MONUMENTS.

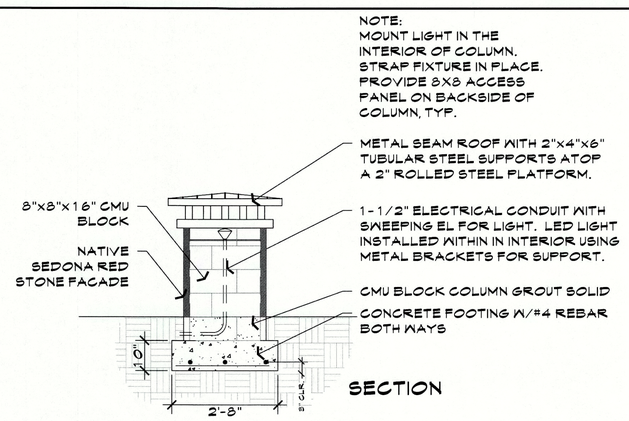

D COLUMN DETAIL ELEVATION

SCALE: NTS

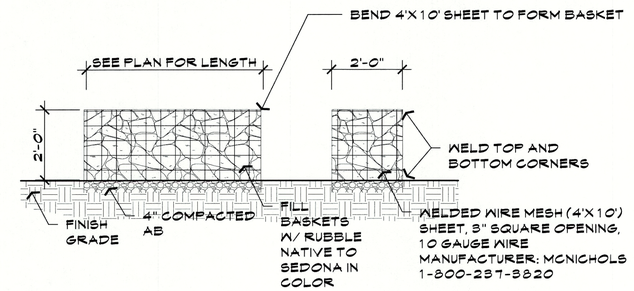

E GABION WALL BASKET SECTION/ELEVATION

SCALE: 1/2" = 1'-0"

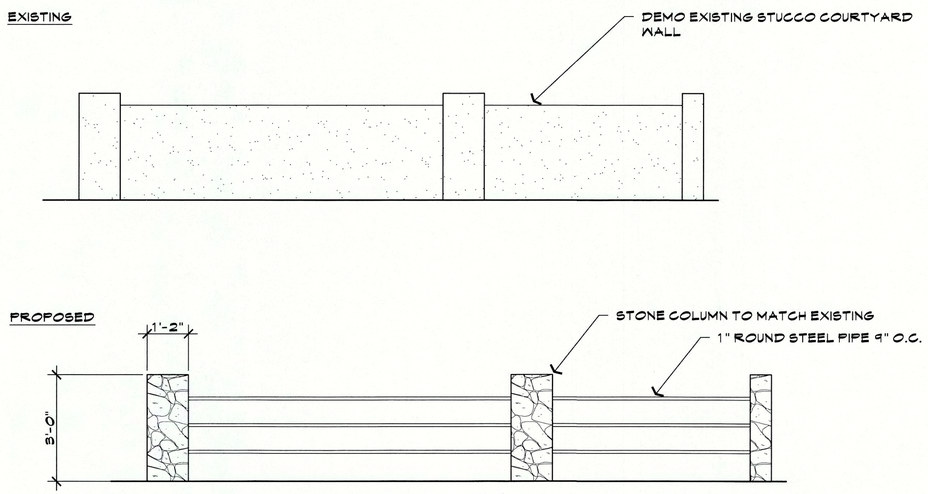

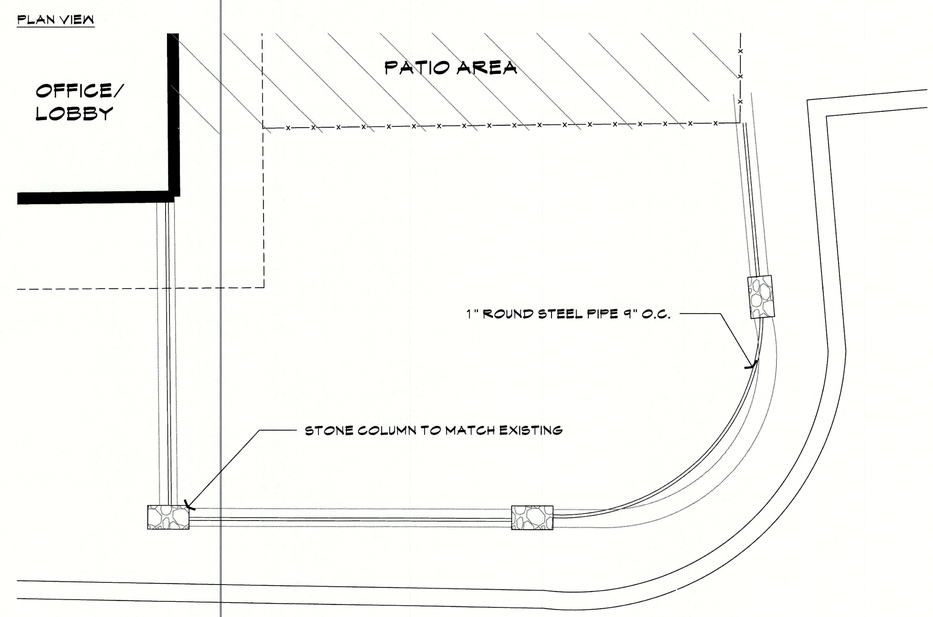

F HOTEL ENTRY/COURTYARD WALL RENOVATION ELEVATION

SCALE: 1/2" = 1'0"

CONSTRUCTION NOTES

1. ALL PROPOSED STONE FACADE IS TO MATCH THE EXISTING STONE FACADE ON THE GOLDEN GOOSE.
2. ROCK FOR THE GABION SHALL BE NATIVE SEDONA RED ROCK, 3"-6" RIP RAP.
3. ALL METAL SHALL BE ELECTROSTATICALLY PAINTED. RUST COLOR IS BY CARDINAL PAINTS, T091-BR47.
4. MONUMENT SIGN IS BY SIGNARAMA. CONTACT: MARK PETERSON 928-714-0740.

the McGough Group
Landscape Architecture
Urban Design · Site Imaging
Parks and Recreation
11110 N Tatum Blvd.
Suite 100
Phoenix, Arizona
85028
602-997-9093
602-997-9031 fax
E-Mail: Timm@mg-az.com

Registered Landscape Architect
CERTIFICATE NO. 27532
TIMOTHY A. MCGOUGH
06-20-16
Expires: 6-30-2018

HARDSCAPE DETAILS
ANDANTE INN - SEDONA
2545 STATE ROUTE 89A
SEDONA, ARIZONA

These drawings, as legal instruments of professional services are, and shall remain the property of the landscape architect.

These drawings shall not be used on other projects or for additions to this project except by written agreement from the landscape architect.

JOB NO. 16-31
DATE: 06-20-16
DRAWN BY: KC, CS
CHECKED BY: TM

REVISIONS:

SHEET NO.
L6.2